COFUR™
Change the way you work.

Acoustic Pod 2026

CO-MUTE





Focus hasn't vanished, it's simply searching for a home
Our debut self-developed acoustic pod restores that sanctuary
A curated space for clarity and connection, right in the heartbeat of the workspace.

Acoustic and privacy issues in open office spaces

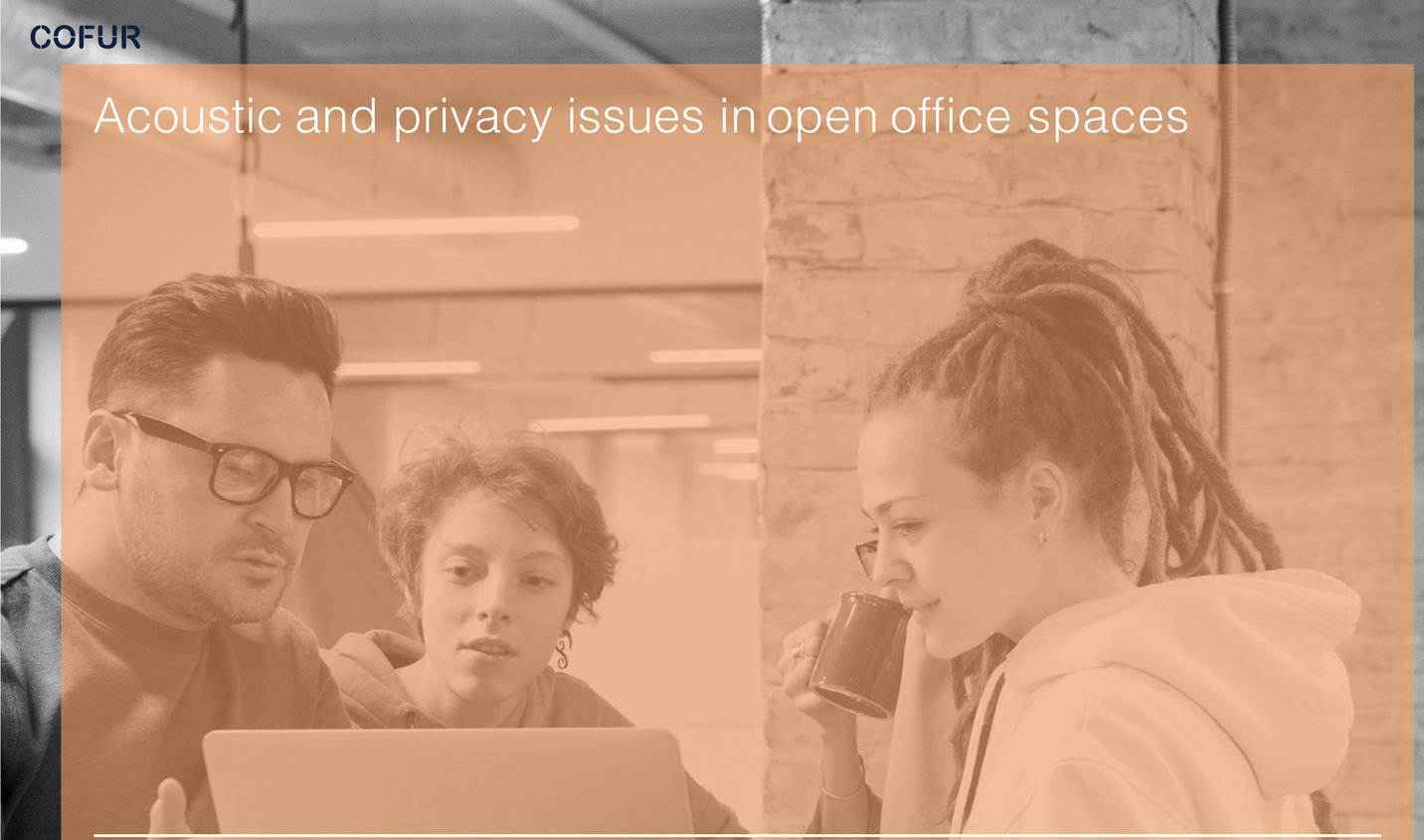

66%

Office workers are 66% less efficient in an open office environment compared to when they work in a private space.

48%

When employees are exposed to high-decibel noise, their short-term memory decreases by 48% compared to a quiet environment.

While open-plan offices foster collaboration and flexibility, they often present significant challenges regarding noise and privacy, which can severely hinder employee concentration and productivity. The constant background noise from phone calls and discussions, combined with a lack of physical barriers for confidential conversations, often leads to discomfort and decreased efficiency. To resolve these issues, employers are increasingly adopting specialized furniture solutions, such as acoustic panels, partitions, and soundproof pods, to create dedicated quiet zones that balance the dynamic nature of an open workspace with the essential need for privacy and focused work.

COFUR

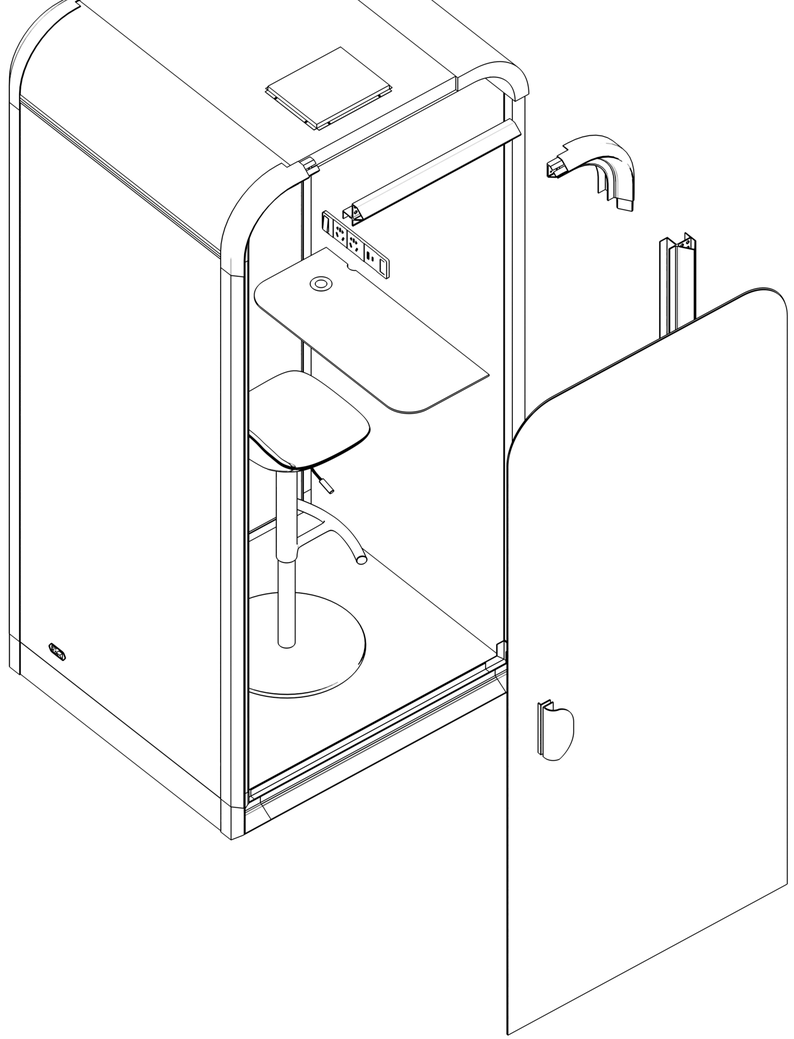

Co-Mute

A compact standing-height focus pod for quick calls, solo deep-work, and confidential conversations. Designed for open-plan floors where space is at a premium but privacy cannot be compromised.

Adaptable to diverse workplace scenarios.

COFUR

Overall Dimensions	W1080 x D1006 x H2300
Internal Dimensions	W960 x D890 x H2180
Package Dimensions	W480 x D2300 x H1200
Acoustic Rating	RW+Ctr 30dB (±5dB) / NIC 32
Capacity	1 Person
Volume	1.3M^3
Quantity	1 Pcs
Weight	325 Kg

Frame Colour

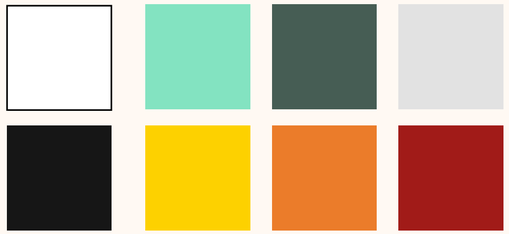

Interior Colour



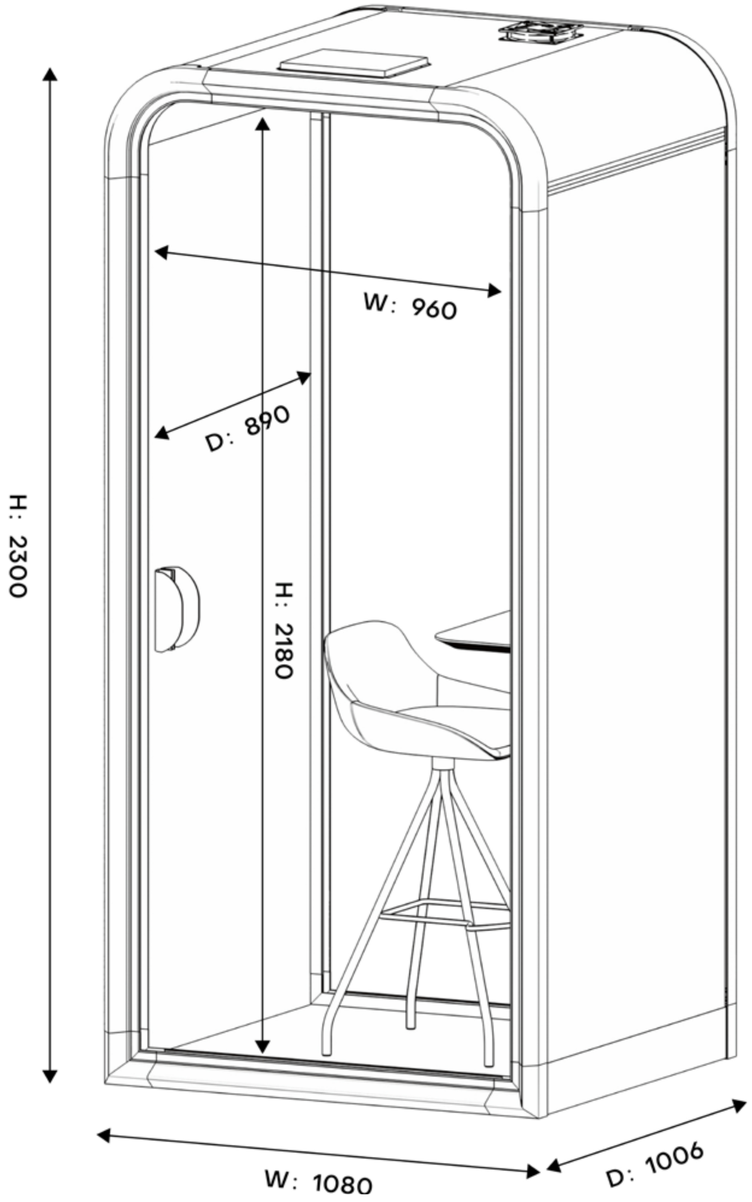

COM - S

Co-Mute

COFUR

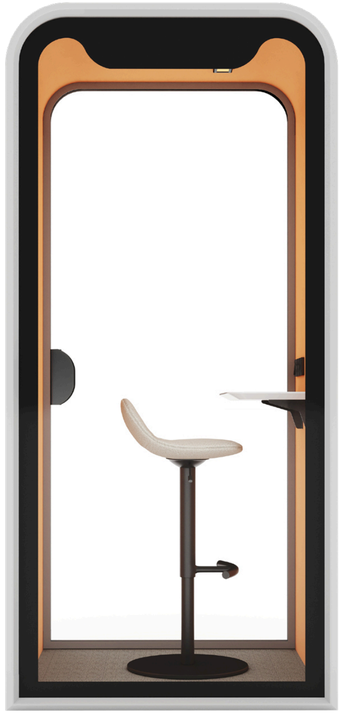

COM - S



COM - M



COM - L

Frame Material	The pod structure utilizes 6063-T5 refined aluminum alloy with a wall thickness of 3-5mm.
Panel Material	50mm double-layer composite steel plates integrated with multiple soundproofing materials and 55kg/m^3 polyester acoustic cotton.
Glass Material	5mm+20A+5mm insulated (double-glazed) soundproof explosion-proof ultra-white glass.
Interior Finish	12mm high-density eco-friendly polyester fiber acoustic panels with zero formaldehyde emission.
Flooring	Combination of 5mm eco-friendly nylon carpet and 50mm double-sided steel plates filled with flame-retardant composite soundproofing materials.

Door System	Equipped with a 5mm+20A+5mm insulated soundproof explosion-proof ultra-white glass door and silent door hardware.
Smart Lighting	Intelligent sensor-based lighting system (Automatic by default, Manual optional). Features 5000K LED source with built-in constant current drive, and a premium anti-glare acrylic cover for soft, natural light.
Silent Ventilation	Intelligent sensor-activated exhaust system with a micro-positive pressure air circulation design.
Universal Power Module	Equipped with a universal power socket, USB ports, and Type-C interfaces.
Expandable Design	Standardized modular design allows for infinite spatial expansion to meet various site requirements.



Plug-and-Play Power Solutions

Equipped with modular universal sockets including USB and Type-C ports for multiple devices.

Silent Smart Ventilation

Automatic silent ventilation with slight positive pressure airflow.



Auto / Manual Modes

Intelligent Motion-Sensor Lighting System

Illuminating Every Moment of Excellence.

- 5000K High-Brightness Epistar LED Chips with Built-in Constant Current Driver
- High-Transparency Anti-Glare Acrylic Diffuser
- Premium Long-Lasting LED Components



Co-Mute

COFUR

Designed Silence for

Focused Work



- 3~5mm wall thickness
- 6063-T5 refined aluminum alloy



- 12mm high-density eco-friendly polyester fiber sound-absorbing board



- Double-layer hollow soundproof glass



- Internal composite multi-layer sound insulation material

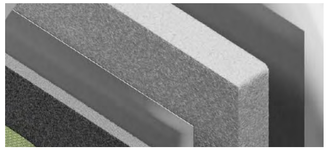

- 5mm eco-friendly nylon carpet
- Internally filled with flame-retardant composite soundproof material

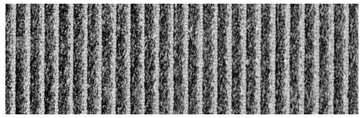

RW+Ctr 30dB (±5dB) with NIC 32 for effective office noise isolation

Designed for every workplace

Why CO-MUTE ?

A meticulously curated environment that anticipates the varied needs of employees throughout their day while paying key attention on aligning ergonomic design with specific work activities to foster well-being and peak productivity.

- Personal Office
- Video Conferences
- Group Meetings
- Privacy in Conversation
- Reading and Meditation

COFUR

Change the way you work.

info@cofur.in
3rd Floor, Odessa Boutique Offices, Road Number 9,
Wagle Industrial Estate, Thane West, Maharashtra 400604
8422824406 I 9076116124 I www.cofur.in

